DIMM-RM9200

Cost-effective ARM9 CPU module based on ATMEL AT91RM9200

Applications

- Industrial controls
- Gateways
- Super small size environment
- Headless devices
- Smart appliances
- Low cost internet appliances

Reduced time-to-market by taking advantage of ready-to-run modules

Simplified system design at reduced development costs

S0-DIMM industrial standard connector for high compatibility

Features:

- High performance 180 MHz ARM9 RISC controller
- Flash, RAM, Ethernet, USB, Audio, SD-Card Bus, UARTs
- Low power consumption (typical 0.5 Watt)
- Bus driver onboard
- SD Card socket onboard
- Low cost evaluation-kit available
- Windows CE BSP available
- Linux BSP available

Microsoft® Windows® Embedded Partner

Gold-level Member

DIMM- RM9200 Architecture

The application-specific portion of a standard embedded application typically requires low pin count components such as relays, power supplies and A/D-converters. An embedded Controller requires components of much higher pin-count and higher density circuit boards. The DIMM- RM9200 concept separates the high-density circuit board of the embedded Controller from the low density, often two-layer, application-specific baseboard.

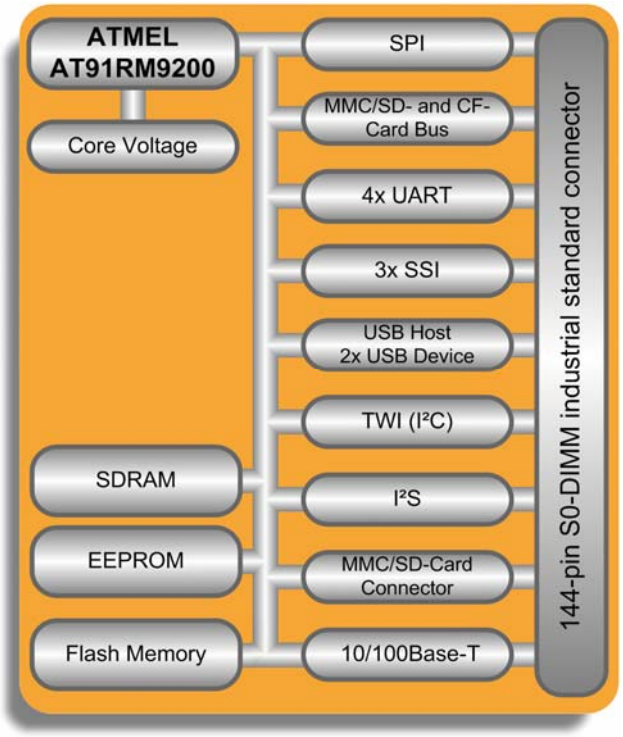

▶ CPU	ATMEL AT91RM9200 @ 180 MHz 32bit RISC ARM920T-Core 8kB / 16kB Cache MMU (Windows™CE enabled) On-Chip SRAM 16kB
▶ Memory	Flash ROM 16 or 32 MB SDRAM 32 or 64 MB EEPROM 1kBit for configuration data
▶ Memory-Card	1 MMC/SD Card Interface (on board) 1 CF-Card Interface
▶ Serial interfaces	Up to 4 Serial Ports available, Including Debug-Port, IrDA, SPI + TWI
▶ Synchronous Serial	3 Synchronous Serial Controllers Hard- and Software Handshaking I²S Analogue Interface Support Time Division Multiplexing Support Full Modem Control Lines on USART1
▶ Ethernet	Ethernet MAC on Chip PHY Davicom 9161A onboard 10/100 MBit/s Auto MDIX
▶ USB	2 x USB 2.0 Host 1 x USB 2.0 Function, (OHCI compliant, full speed [12 MB/s])
▶ Timer/Counter	Two 3-channel, 16bit TC
▶ JTAG	IEEE 1149.1 JTAG boundary scan for all digital pins
▶ I/O signals	7 free programmable I/O lines
▶ Power supply	Operating voltage 3.3V DC (±10%) (integrated DC-DC converter 3.3V to 1.8V)
▶ Power consumption	typically 140mA @ 3.3V
▶ Ambient conditions	Operating temperature: 0°…+55°C
▶ Dimensions	67,5 x 36,5 mm
▶ Connectors	144-pin S0-DIMM card edge connector

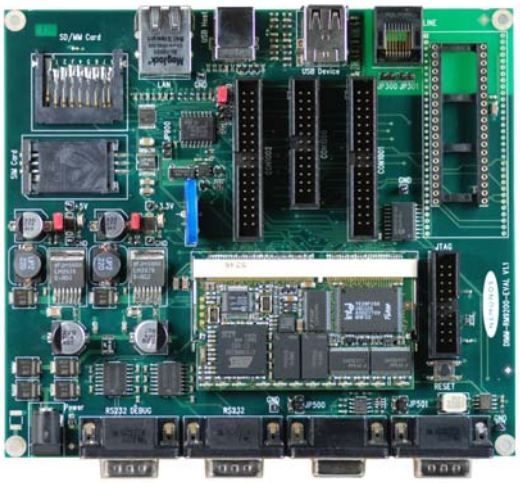

The DIMM-RM9200 Evaluation Board

For more information about Garz & Fricke, please contact:

Garz & Fricke GmbH
Tempowerkring 2 • 21079 Hamburg • Germany
Phone: +49 40 79 18 99-30
Fax: +49 40 79 18 99-39
Internet: http://www.garz-fricke.com info@garz-fricke.com

© Garz & Fricke GmbH, 2006

Garz & Fricke assumes no responsibility for any errors which may appear in this document, reserves the right to change devices, software or specification detailed herein of any time without notice and does not make any commitment to update the information contained herein. Garz & Fricke products are not authorised for use as critical components in life support devices or systems.