KIOSK-150

15" Open-Frame Touch Terminal

Applications

- Interactive Information Board
- Customer Information
- Passenger Information System
- Public Services
- Internet Surf Station

15" Open Frame Build-In Solution for Point of Service applications

Acoustic Wave Touch Screen for Harsh Environments

Supports Windows XP Pro® or Windows XP embedded®

Features:

- 15" XGA TFT display, 1024 x 768 pixels, integrated backlight inverter
- "Surface Acoustic Wave" touch panel for harsh environments
- Operation with gloves possible
- 1.9 GHz Pentium M® or Fan less Geode® LX800 CPU
- Up to 1 GB main memory
- Up to 1 GB solid state memory
- 60 or 120 GB Hard Disk, commercial or heavy-duty 24/7 (optional)
- 10/100/1000 Mbps Ethernet interface
- USB 2.0, RS232, Audio, external monitor
- Open frame construction for flexible assembly
- Watchdog Timer

The KIOSK-150 is available in two versions, the fan less ultra low-power solution, with Geode LX800 processor (KIOSK-150-LX) or the more powerful solution with Pentium M 1.9 GHz (KIOSK-150-P19).

The KIOSK-150 is delivered with a stainless steel front panel. Other panels or frames (e.g. for 19" rack mounting) are available on request.

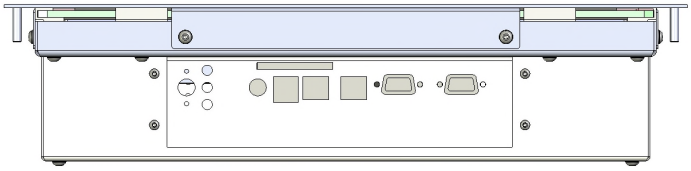

Bottom view of the KIOSK-150

Technical Data:

Product		**KIOSK-150-LX**	**KIOSK-150-P19**
CPU	Type	AMD® Geode LX800	Intel® Pentium M
	Frequency	500 MHz	1.9 GHz
	Chipset	AMD® CS5536	SiS® 661CX + SiS® 964
Memory	Main Memory	1024 MB DDR-RAM	
	Solid State	1024 MB High Speed CF Card	
	Hard Disk (opt.)	60 or 120 GB, 8 MB buffer, 5400 rpm, 61.3 MB/s, heavy-duty, 24h operation	
Software		Windows XP Pro®, Windows XP embedded® or Windows CE® 5.0	
Display	Size Viewing Area Resolution Colors Luminance	15" 304 x 228 mm 1024 x 768 landscape (XGA) 16 mio. Colors 250 cd/m²	
Touch screen	Type Resolution Light transmission	Surface Acoustic Wave 4096 x 4096 Pixels 90%	
Interfaces	Serial	1 x RS232	
	Ethernet	1 x 10/100 MBit/s Base-T	1 x 10/100/1000 MBit/s Base-T
	USB	4 x USB 2.0	2 x USB 2.0
	External Graphics	RGB, max. 1920 x 1440 Pixels	RGB, max. 2048 x 1536 Pixels
	Keyboard/Mouse	PS/2 (Y-cable included)	
	Audio (AC'97)	1 x Line-In 1 x Line-Out 1 x Mic.	
	Compact Flash	1 x CFII Port	
	Expansion Port	1 x PCI/104 Slot	
Watch Dog		Software programmable, 1 – 255 sec.	
Environmental Specification	Ambient temperature Storage temperature Climatic suitability Condensation	0 … +45°C -20 … +60°C 5 % to 85 % RH Non-condensing	
Electrical data	Supply voltage Power consumption	90 … 264 VAC (ext. power supply) 12V VDC (alternative) Typ. 34 W (36 W with hard disk)	90 … 264 VAC (ext. power supply) 12V VDC (alternative) Typ. 68 W (70 W with hard disk)
Mechanical data	Dimensions Weight	396 x 320 x 77.2 mm ~6 kg	

External measurements:

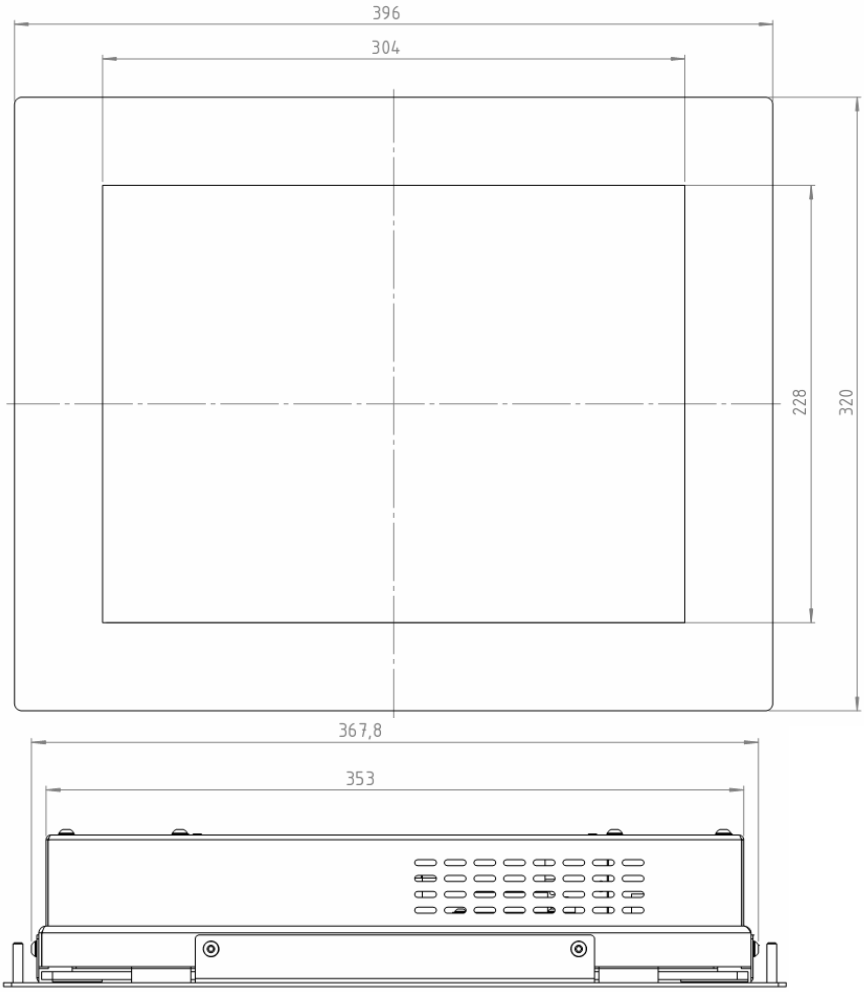

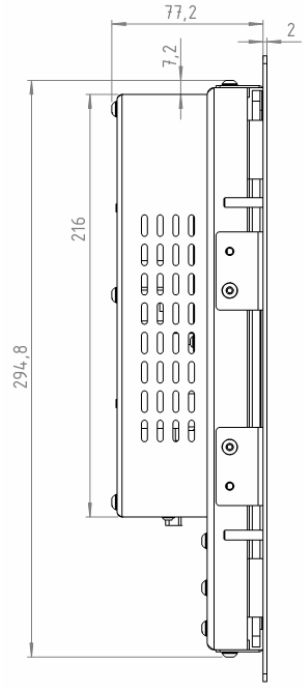

Installation dimension:

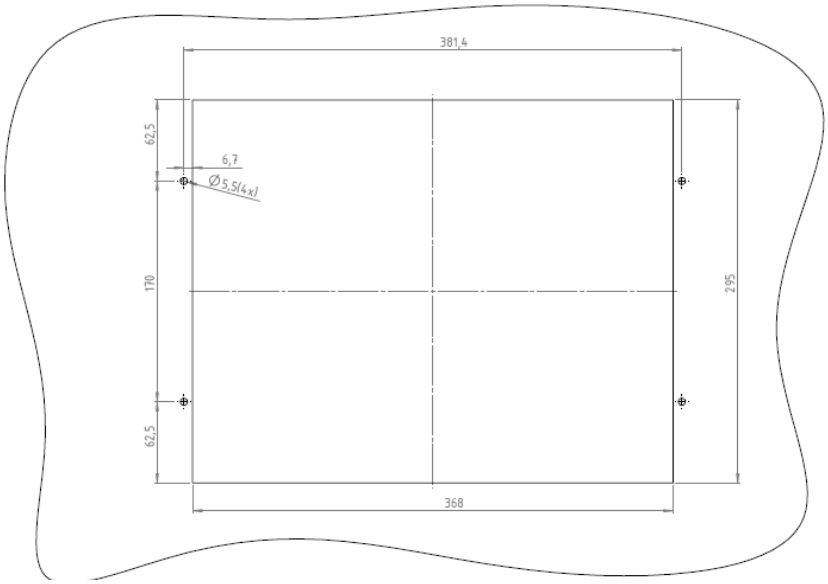

Für mehr Informationen über uns wenden Sie sich bitte an:

Garz & Fricke GmbH
Tempowerkring 2 • 21079 Hamburg • Germany
Phone: +49 40 79 18 99-30
Fax: +49 40 79 18 99-39
Internet: http://www.garz-fricke.com info@garz-fricke.com

© Garz & Fricke GmbH, 2007

Garz & Fricke übernimmt keine Verantwortung für Irrtümer und Druckfehler in diesem Prospekt. Garz & Fricke behält sich das Recht vor, Teile des Angebots oder das ganze Angebot ohne vorherige Ankündigung zu ändern oder zu streichen. Garz & Fricke Produkte sind nicht autorisiert als Bestandteil von lebensrettenden oder lebenserhaltenden oder sonstigen medizinischen Geräten.